LONGJING®
Electric

LXK3 Limit Switch 行程开关

特性Specialty

外壳采用特种合金金属适用于交流50~60Hz；AC380V；DC220V；电流10A的控制电路中，作为机床、机械的自动控制、限制运动、传动机构动作或程序控制之用。

能工作在–25~+40℃的环境温度中；90%的环境湿度中；海拔在2000m；防护等级IP65；符合IEC337–1，GB14048.5–2001标准。

The product cover made of special alloying metal, which is to service at such control circuit as AC50~60Hz, voltage of 380VAC or 220VDC and current of 10A to automatically control Mechanical tool, limit movement and action of drive mechanism and control program.

The nominal service conditions include an ambient temperature of –25~+40℃, an ambient relative humidity of 90%, an altitude of 2000m and protection degree of IP65.It complies with the standard of IEC337–1and GB14048.5–2001 .

主要技术数据
Main technology data

用途use	行程开关的典型用途是控制交、直流电磁铁 the typical usage of travel switch is to control electrical magnet of AC or DC			
控制能力 control capacity	交流 AC–15		直流 DC–13	
	额定工作电压Ue Rated working voltage	额定工作电流Ie Rated working current	额定工作电压Ue Rated working voltage	额定工作电流Ie Rated working current
	380V	0.8A	220V	0.15A
	220V	1.4A	110V	0.3A
	110V	2.8A		
额定值 rated value	额定绝缘电压Ui=380V,约定封闭发热电流Ith2=10A Rated insulation voltage Ui=380V, conventional enclosed heating current Ith2=10A			
短路保护 protection for short–circuit	额定熔断路电流1000A RL1–15/10 Rated fuse current1000A RL1–15/10			
操作频率 operation frequency	交流AC2400次/小时，直流DC1200次/小时			
电寿命 eleatrical	交流电寿命150万次，直流电流寿命30万次 Electrical life of AC one million and half times ,Electrical life of DC three hundred of thousand times			
机械寿命 mechanical	LXK3–20 S.H/H1、H2、H3、LXK3–20 S.H/W为600万次其他规格为1000万次			
动作重复精度 repetition precision of action	在10次动作中最大值(或最小值)与平均之差不大于0.05mm The difference between the maximum(or the minimum) and the means is no more than 0.05mm in ten times of actions			
外壳防护等级 protection degree of enclosure	IP65 GB4208–84			
耐振动 vibration resistance	频率10~55Hz, 加速度acceleration 10g(90M/S), 振幅amplitude 0.75mm			

操作型式代号
Code name for operation mode

Z	柱塞式、自动复位 Plunger–type, automatic reset
L	滚轮柱塞式、自动复位 Roller plunger–type, automatic reset
B	滚轮转臂式、自动复位 Roller rotary arm type, automatic reset
T	可调滚轮转臂式、自动复位 Adjustable roller rotary arm type, automatic reset
J	可调金属摆杆式、自动复位 Adjustable metal pendulum arm type, automatic reset
D	弹性摆杆式、自动复位 Elastic pendulum arm type, automatic reset
H1	叉式、二轮在同一方向、不自动复位 Fork type, two wheels at same direction, no automatic rest
H2	叉式、左轮在前、右轮在后、不自动复位 Fork type, left wheel front, right wheel back, no automatic rest
H3	叉式、右轮在前、左轮在后、不自动复位 Fork type, right wheel front, left wheel back, no automatic rest
W	万向式、自动复位 Universal type, automatic reset

型号mode	PT	MD	TT	OF	RF	TF
LXK3–20S.H/Z	1.75~2mm	≤1.2mm	≥6mm	1±0.15kg	≥0.5kg	<3kg
LXK3–20S.H/L						
LXK3–20S.H/B	18° ~ 22°	≤15°	≥60°	1.53±0.35 kg.Cm	>0.6 kg.Cm	<2.4 kg.Cm
LXK3–20S.H/T						
LXK3–20S.H/J				1±0.25 kg.Cm	>0.3 kg.Cm	<2.2 kg.Cm
LXK3–20S.H/D						
LXK3–20S.H/H1	70° ~ 80°	40° ~ 60°	90° ~ 5°	2±0.3 kg.Cm	2±0.3 kg.Cm	
LXK3–20S.H/H2						
LXK3–20S.H/H3						
LXK3–20S.H/W	12° ~ 20°	8° ±2°		0.38±0.08 kg.Cm	>0.15 kg.Cm	

保护外壳型式代号
Code name for protection enclosure mode

K	无保护外壳、开启式元件 No protection enclosure, open type of component
S	竖式、底部有一出线孔 Vertical type, a outgoing hole at the bottom
H	横型、底部、两侧各有一出线孔 Horizontal type, there is respectively a outgoing hole at the bottom and two sides.

LXK3-20S/Z

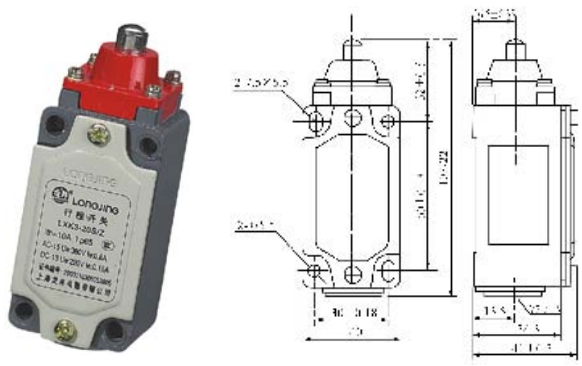
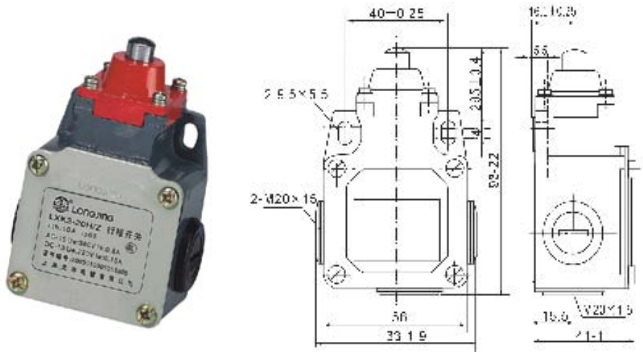
LXK3-20H/Z